Johnson County Radio Amateurs Club, Inc.
P.O. Box 93
Shawnee Mission, KS 66201

FEEDBACK

September 2017

Finding the Fox

Three teams, led by Charlie Van Way, NØCVW, Herb Fiddick, NZØF and Jay Burgherr, NØFB used different techniques to hunt Bill Gery, WA2FNK, who had hidden Eddy Paul's KYØF new fox on August 25.

About 7:10, Jay called Bill on the .29 repeater to tell him that the contestants were ready. A surprised Bill Gery, who had started transmitting at 7:00, told the people to "head south".

Charlie, Chip ACØYF and Deborah Buckner KDØRYE and Kevin Thornton, KEØNVU left the Overland Park Christian Church parking log, headed west to Antioch and turned south. The group picked up the fox at 87th Street and heard Bill announce that the fox was in Sector D, south of 95th Street. The newly licensed Kevin pulled out the map, advised the group that Sector D ran south of College and east of Quivera, and that there was a high ground at College and Antioch. Off they went.

Inside the car, Chip used a rubber duck antenna, attached to an attenuator (something off one of Charlie's old Heathkit projects) and an HT. He added 10, then 20 and then--upon reaching College Boulevard--40 dB of attenuation to keep the signal on his S-meter.

Charlie pulled into the parking lot and, to the bemusement of the Burger King diners, whipped out the two-meter tape measure Yagi antenna that won the last JCRAC club shoot out. Taking several readings, he pronounced the signal source to be due west. Chip and Deb wanted to stop at Shannon Valley Park, about two blocks south of College on Grant, but Kevin thought that there was another park right on College a little further west. Charlie thought Shannon Valley too far south, so opted to proceed west on College.

The signal dropped rapidly as the group passed Grant. Charlie pulled into a bowling alley parking lot and took more readings with his Yagi. Chip and Deb exchanged smugly knowing looks as the group jumped back into the car to backtrack toward Shannon Valley Park.

As they pulled into the park, Chip announced that the signal was "huge". Deb, on the other hand, made the disheartening observation that Bill was not in the park.

see FOX on page 2

JULY MEETINGS

Sept 8 *-- Solder and Soldering - John Raydo, KØIZ*

Sept22 *– Digital Modes: Winlink, Fldigi and Flmg - Bill Gery, WA2FNK*

The Johnson County Radio Amateurs Club normally meets on the 2nd and 4th Fridays of each month at 7:30 PM at the Overland Park Christian Church (north entrance), 7600 West 75th Street (75th and Conser), west of the Fire Station.

Much of the membership travels to the Pizza Shoppe at 8915 Santa Fe Drive for pizza buffet and an informal continuation/criticism/clarification of the topics raised at the meeting ... or anything else.

Leave the church, turn right (west) on 75th. Turn left (south) on Antioch. Turn right (west) on Santa Fe. Pizza Shoppe is just past the Sonic on your left.

IN THIS ISSUE

-> FEEDBACK <-

A publication of the
Johnson County Radio Amateur Club, Inc.

Bill Gery, KA2FNK, President

Jaimie Charlton, ADØAB, Vice President

Ted Knapp, NØTEK, Secretary

Cal Lewandowski, KCØCL,Treasurer / FEEDBACK distribution

* * *

Chip Buckner, ACØYF, Editor

Charlie Van Way, NØCVW, Photography

Deb Buckner, KDØRYE, Contributing Editor

All email addresses are available at w0erh.org

---

from FOX on page 1

Someone suggested crossing College to enter Corporate Woods. Someone else suggested that that was silly because Sector D was south of College. Charlie ignored the bickering and drove into Corporate Woods. As the more experienced hams argued about whether Bill had confused north and south, whether they were wasting their time north of College, and the margin of error when using home-made Yagis, the new guy said "Doesn't he drive a Jeep? There's a Jeep over there. And there's someone in it." Success.

Second place finisher, Herb Fiddick (right) used a pair of antennas on a switching device that caused his HT to generate a tone when the antennas were not equidistant from the signal source. His group took three bearings from three different locations and triangulated to get the location. Two of our bearings, Herb said, were quite good. The problem was figuring out which two were good and which one wasn't.

Jay Burgherr's group used a "bat-wing" antenna that operated on the same principle as Herb's antenna. For whatever reason, he reported that his unit worked best aiming at the signal source instead of broadside to the signal source.

At the finish, a father and son were using 2.3 GHz to race small cars around the parking lot. When approached and advised of our activity, "father" asked if he should turn down power so as not to interfere with us. We assured him that he presented no problems and invited him over to see what we were doing. About that time, Tom Wheeler, NØGSG, who used his Doppler unit to find the group, pulled up and the two swapped radio stories.

PRESIDENT'S CORNER

September is here. Where did the summer go? I have been slowly making the new Jeep radio-ready.

I've been installing radios and antennas. The current project involves making improvements to the way the coax and power run. Right now my den floor looks like an aircraft crash investigation site. Wire and cable from the old Jeep are spread everywhere, awaiting installation into the new Jeep.

Public service opportunities continue through September.. Look for an opportunity to volunteer for at least one of these events. Larry's List can give you the necessary details.

Ted will be looking for volunteers tour guides for Ensor. Please sign up for one of the slots. It only a few hours on a Saturday or Sunday.

The Ensor auction planing is under way along with other activities. The events will start Friday, October 27. The auciton will begin at 11 am Saturday, October 28. Look through your shack for those items that need a new home.

– Bill Gery – WA2FNK

As to whether Bill Gery knows the difference between north and south? "Sector B. I said Sector B, not D." Bill and Charlie each blamed themselves. "I know better", Bill said. "I should have said 'Bravo'."

"I had a radio", retorted Charlie. "I should have asked for clarification."

>> JCRAC FEEDBACK <<

Johnson County Radio Amateurs Club - August 11, 2017

Meeting Date: Friday August 11, 2017. The meeting started at 7:30PM.

Attendance: Self introduction with name and call sign. 35 signed the check in sheet. This was followed by the Pledge of Allegiance.

The Minutes from the July 28, 2017 meeting were read and accepted with one opposed vote.

The Treasurer's report - NR

Old Business:

- We welcomed all 1st time visitors to tonight's Club meeting.
- Repeater Update – All are working well. No news on a new location for the 440 Repeater.
- Bill Gery, KA2FNK is still working on contacting Rich Britain, NØENO SATERN Divisional Coordinator to see what exactly is needed to help support the Salvation Army SATERN communication van.

New Business:

- Ensor Museum volunteers will be needed again for the month of October. All who volunteer will be entered into a drawing for a $50 Gift Certificate to Associated Radio.
- This year's Ensor Auction will be on Saturday October 28th with activities also taking place Friday night October 27th

Reports:

- 6 m – NR
- 10 m SSB Roundtable – 1 participated on August 10
- 40m SSB Roundtable – 8 participated on August 9
- Fusion Digital 440 – NR
- 2m Wheat Shocker net – 16 Check-ins on August 10 and 20 Check-ins on August 3
- HF Activity – French Polynesian on CW and Virgin Islands on 20m mobile

Announcements:

- Hawk 100 – September 9 and 10. See Bill Gery KA2FNK
- Skywarn Recognition Day - December 1st and 2nd. See Bill Gery KA2FNK
- Bikers for Babies – September 16th. See Matt May, KC4WCG
- MS 150 Ride – September 16th and 17th. See Herb Fiddick NZØF
- Santa Fe Trail/William Becknell Special Event Station – September 9th and 19th. See Steve Everley KCØVYS
- WW1USA - October 14th and 15th. See Herb Fiddick NZØF
- Watch Larry's List for upcoming events.

Business meeting adjourned at 8:06 PM

Program:

- The Program for this evening was an Update on Kansas Section Activities by Ron Cowan KBØDTI, ARRL Kansas Section Manager.

Johnson County Radio Amateurs Club - August 25, 2017

Meeting Date: Friday August 25, 2017.

Tonight's meeting was a Fox Hunt. No official meeting took place.

Submitted by Ted Knapp, NØTEK, Secretary.

The Icom PW-1 Solid State Kilowatt Amplifier

The Inside Story -- Tom Wheeler, NØGSG

A lot of ham gear passes by my service bench. In a former life, I was a full-time service technician for Radio Shack. That was a long time ago, but I still like fixing things.

Modern electronic items are pretty much disposable - - unless they're something expensive or irreplaceable. Things I see tend to fall into these categories - either it's expensive, or has special meaning to the owner (such as Grandma's stereo).

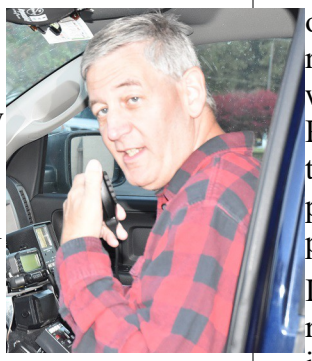

It's very interesting to look inside things to see how they work, and many of us aspire to build an ultimate station, or become "fixers" ourselves. These "Inside Story" articles will give everyone a peek inside equipment I work on, both old and new. Our goal is to get a better appreciation for the science and art of the engineering in each product, and maybe make those "block diagrams" you studied for to pass your ham exam a little more meaningful.

What better place to start than a classic HF amplifier, the Icom PW-1?

This amplifier is a literally a giant "black box." It weighs in at 55 pounds, though it's not much to look at from the outside. It amplifies an HF and 6-meter transceiver's output to a full kilowatt of continuous RF output.

And Icom does mean *continuous* - - as in brick-on-the-key, 1000 watts of output for an indefinite period of time, no limits (except for what your antenna can handle). As a bonus, these amps only require about 40 watts of drive from your HF rig to make those 1000 watts of output...so your rig hardly works hard at all when driving the PW-1. The PW-1 also has a built in antenna tuner, making this a very nice package indeed. Let's take a peek inside...

Inside this amplifier things are really packed. There isn't room inside this unit to change your mind, much less replace any components. To work on a PW-1, you must disassemble it. The power supply is buried underneath the antenna tuner and isn't visible in the photo.

Let's take a moment to look at signal flow in block diagram form.

see INSIDE on page 6

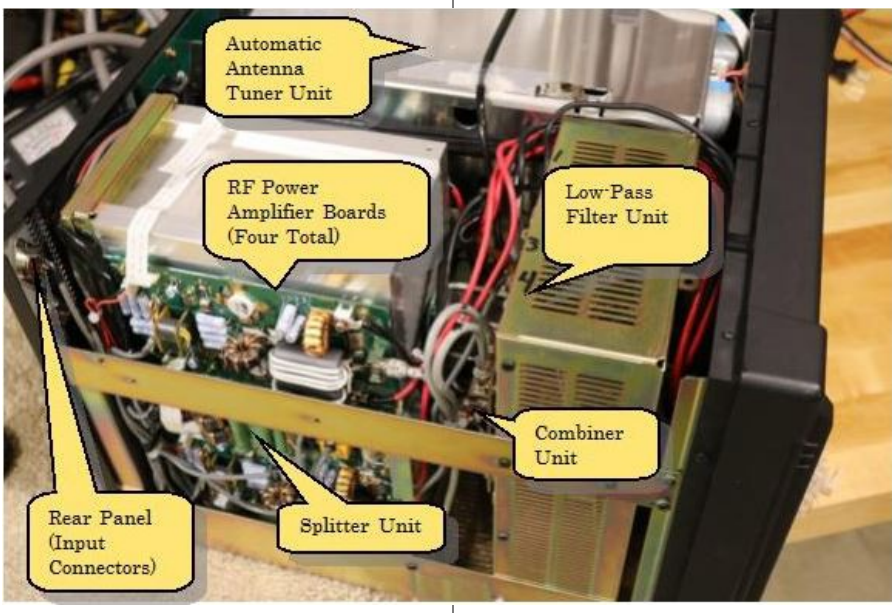

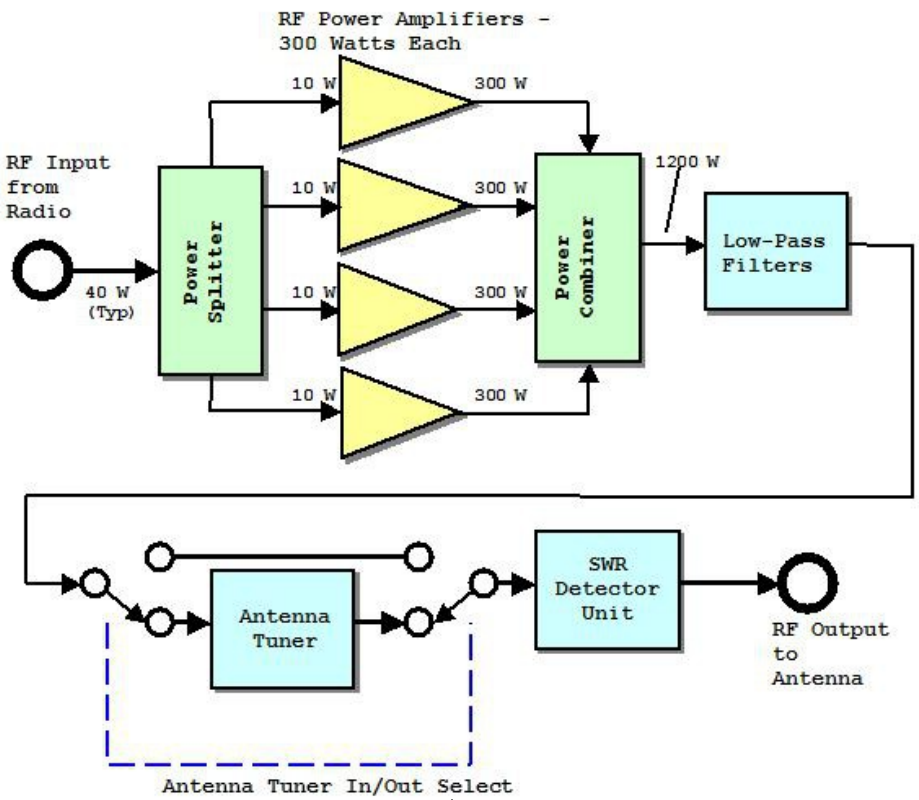

from INSIDE on page 5

The signal flow is a bit different than most amateur radio amplifiers. To get a reliable 1 kW output, Icom simply chose to team up four 300 watt power amplifier (PA) units. The input power is distributed to the PAs by the splitter (which also handles impedance matching - - everything is 50 ohms internally). The resulting signals are sent to the combiner to make a 1200 watt output signal. A bit complex (more to go wrong when there are four amplifier modules instead of just one), but good from a heat management standpoint (it's easier to cool four small amplifiers than one giant one, especially when we're using transistors, which are very finicky about not being too hot).

The combiner has a circuit that checks to ensure that all four amplifiers are outputting power equally. If one PA dies, the other three will be way out of balance, very much like a washing machine in the spin cycle with all the clothes crammed on one side of the tub. Something's bound to get broken.

By the way, if you look carefully in the previous photo, you can see the four cables going into the combiner from the PAs. They're marked 1, 2, 3, and 4. I did that before unplugging them as the memory is the first thing to go...

Icom built this amplifier conservatively. Each module is capable of 350+ watts of output, but in actual service runs at around 250 watts. This strategy works - - PW1s are very reliable. I usually only see them broken for one of two reasons - either it's been hit by lightning or a healthy power surge.

Repairing a PW-1

This PW-1 was showing an out-of-balance warning when the owner transmitted, so one or more of the four PAs was not healthy. This PW1 was going to come apart!

The trick to getting one of these apart is first to not panic. The assemblies do sort of fold out from the amplifier chassis after some gentle coaxing and swearing (in Japanese, of course).

see INSIDE on page 7

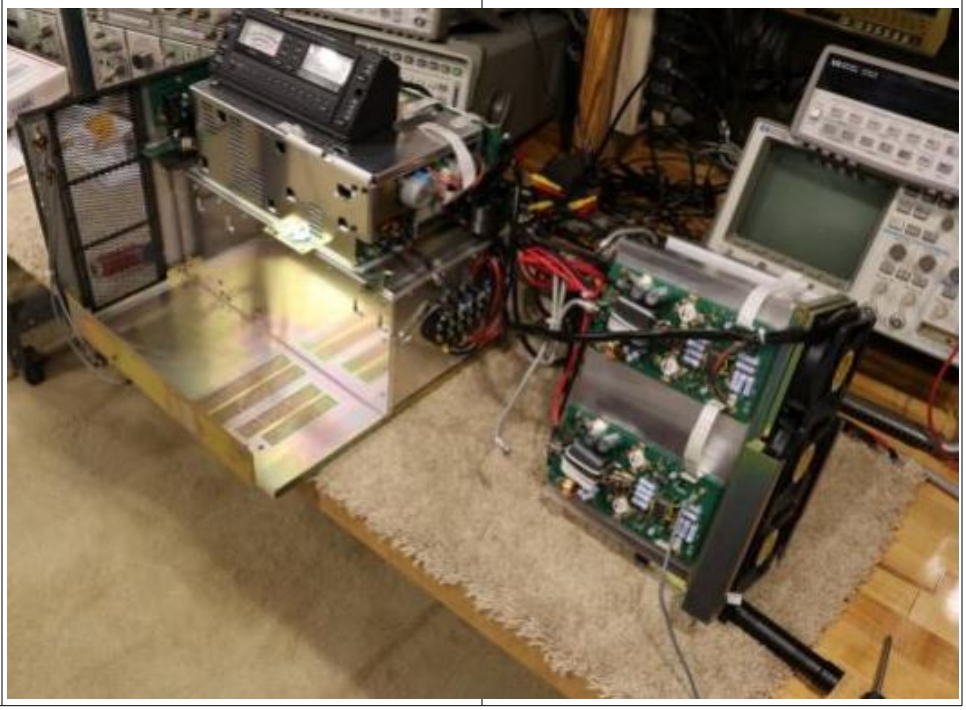

from INSIDE on page 6

To remove the PAs, the front cover, dc wiring, low-pass filter and combiner must first be removed; after that, the PAs may be removed.

In the photo on the previous page you can see the "inner" PAs, plus the three fans behind them. These fans are temperature actuated and rarely come on unless you're transmitting a lot. There is also a large fan behind the power supply; it, too, is temperature controlled.

Here (below) you can see one of the four PA modules. This was the bad one. Again you can see that I've carefully marked each point on the board before disconnecting the wires. Each PA uses a pair of MRF-150 power field effect transistors (power MOSFETs) to do the amplification. They must be replaced in "matched pairs" so that the amplifier operates with minimal distortion. These transistors are meant to be bolted to a metal heatsink (since each one is putting out over 150 watts of RF), and you can see that the leads are not only gold-plated, but wide and flat. This construction keeps the lead inductance low and the connection between the transistor and circuit as close to an ideal, zero-resistance wire as possible.

The numbers on the tags, 76 and 77, are from the vendor and indicate the closeness of the match of the parts.

I have no idea of what 76 and 77 stand for, but I bet it is VGS(ON). I checked the new parts on a curve tracer - - they were very close. As Hambone would say, "nice pair."

Both new parts tested identically as shown above. They were actually even close to one of the originals, which was okay. The other original was bad. Very bad. Its curve shows it sucking amperes of current regardless of input. In other words, one original part was okay, the other was partially shorted or leaky.

You might wonder why I did all these test on the transistors instead of just replacing them and asking no questions. Primarily because with the PW-1 open and disassembled, there's no way (short of building your own personal test fixture) to measure individual test points in the amplifier. To find the bad PA (there are four of them), you must do some careful detective work before taking things all the way apart. When you find the bad PA, you hope it's a simple problem (like a bad transistor) - and your testing will be confined to things you can do without power applied, because it's dis-

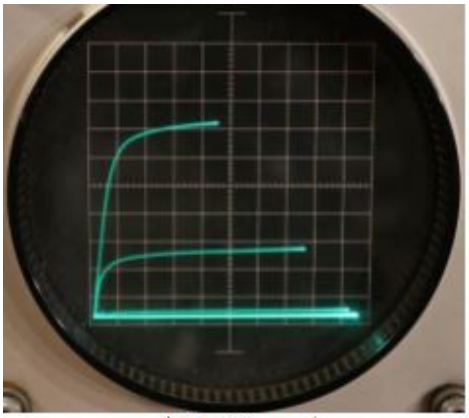

(Nice Curves)

assembled. Oh yes, and did I mention that these transistors are about $150 for a pair.

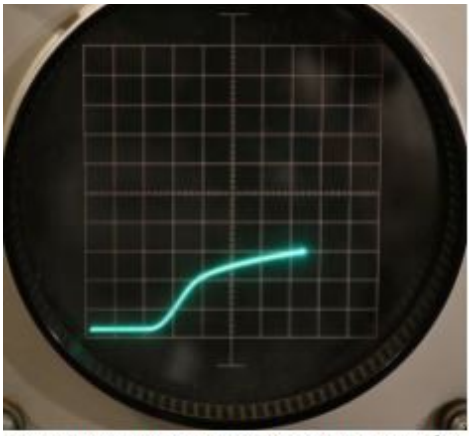

Crappy Curve - Device is Very Leaky

In a low-power circuit, wrong decisions made during repairs usually mean you get a "redo" and try a different solution. High power equipment like the PW-1 is very unforgiving. The power supply can deliver about 2,500 watts. That's enough power to do a lot of damage - even though there are fuses in the critical circuits.

So here ends the inside tour of the PW-1. Our "patient" fared well after the repairs and is now back in normal service. The PW-1 is a pretty slick box. I hope you've enjoyed looking inside.

>> JCRAC FEEDBACK <<

Hambone Gets Sidebanded

A Hambone Story -- Jaimie Charlton, ADØAB

"You're wrong! You don't even know what your fancy HF transceiver is doing - and you think you're a ham. Here, read the book!" shouted Dude as he tried, and missed, to throw the heavier-than-it-looks *ARRL Handbook* at his brother.

"Look, Dummy-Dude," a dyslogistic name Hambone uses when losing arguments with his younger brother. "I have a license and you don't, so there!"

"Where did you find your license, in the dumpster behind the parts store? Everybody knows that CW doesn't have sidebands. It doesn't matter whether your transceiver says upper sideband or lower sideband when sending CW, it always transmits on the same frequency. That's the frequency that makes the receiver at the other end beep at your side tone frequency."

"You look! You hooked up all this stuff and you still can't see what's happening! Geez!" continued Dude pointing at Hambone's Yaesu FT950 transceiver connected to a dummy load, an old oscilloscope, an HP frequency counter, a new Rigol spectrum analyzer and a separate communications receiver. "Oh, and I bet Unck doesn't even know you've got his new analyzer. He's gonna be pissed!"

"No, you look! I set the transceiver to send CW on exactly 7,220,000 Hertz. That's 7.22 MHz in case you can't count that high. I press the key and it transmits on exactly that frequency. See, the counter reads the same and there's one peak on the spectrum analyzer…"

"Yeah, "interrupted Dude. "And the receiver over there is beeping at 700 Hertz, your side tone."

Just as the argument was heating up again, a discerning nose would have detected the smell of hot coffee closely followed by the arrival of the boys' Uncle Elmer.

"Hi Unck," said Hambone trying to grab the intellectual high ground. "I'm working on a project for my Electronic Communications class. It's just started and it's already hard."

"You mean my old buddy, Professor Bunson Bernier, is already putting the screws to you guys? I didn't think school started until next week or so."

"No, Unck," continued Hambone. "Classes are starting earlier this semester, for some reason. At least, that's what the email I got said. It said old man 'Bunny' is still on vacation so, we've got a new guy subbing for him. His name is Adjunct Professor Hardenshaw Storpington-Pate. I think he's visiting here from some school in England or the UK or someplace."

"Hmm, I don't believe I know him. But that name sure is a mouthful," said Elmer.

"He introduced himself on-line through email. Nobody's actually seen him, yet. His email said to call him Professor Pate, but I call him Professor Hardon because he has already given a really hard assignment. And, it's due tomorrow."

"What's the assignment?"

"We have to write a description of the various types of radio signals – CW, AM, SSB and FM – and the differences between them. He also said to make it interesting or weird, but don't get carried away. I don't know what he meant by that," moaned Hambone.

"That doesn't seem so hard," said Elmer. "You already know all that."

"Yeah, but what he knows is wrong!" chimed Dude, who up to this point had been quiet. "If Hammy writes what he knows, he'll be the first guy to flunk a course before it even starts."

"Shut-up!" countered Hambone. "I built this test setup just so I could check out everything and be sure it's right."

"Well, it's a nice setup, but I don't remember you asking to use my frequency counter or my new analyzer."

"I told you he'd be pissed," reminded Dude.

"I'm sorry," said Hambone. "I was in a hurry and I didn't think you'd mind."

"I mind," replied Elmer. "Just because these instruments are here, doesn't mean they're up for grabs. I'll let it go this time, but next time, ask."

see HAMBONE on page 9

from HAMBONE on page 8

”I will, I promise! Here’s what I’ve got for CW,” continued Hambone, changing the subject.

“That’s okay,” said Elmer. “I heard you guys earlier. You’re both right and both wrong. CW is simple. When you press the key, the transmitter sends a steady wave that we call the carrier even though it isn’t ‘carrying’ anything. When you release the key, the transmitter stops sending. That’s it. The carrier is either on or off.

The CW-LSB and CW-USB settings on your transceiver don’t affect the transmitted signal. Nor does the sidetone setting.”

“But Unck,” asked Dude, “Doesn’t the sending transceiver’s sidetone set what the guy at the other end hears?”

“No. His sidetone is determined entirely by the settings on the far-end receiver. A straight carrier has no tone. The reason you hear anything at the far end is because that receiver has an internal oscillator called the beat frequency oscillator, or BFO. That oscillator generates a signal that’s inserted into the receiver’s Intermediate Frequency, or IF, amplifier. There, it ‘beats’ against the incoming carrier and creates the tone you hear.”

“So, the tone that comes out of the receiver is actually created by the receiver itself?” asked Dude.

“Yes. For example, if your receiver’s IF frequency is 450,000 hertz or 450 KHz, and you want your sidetone to be 700 hertz, you would set the BFO to either 450,700 Hertz or, 449,300 Hertz. The sidetone is the difference between the signal passing through the IF amplifier, which is 450KHz, and the BFO frequency. Regardless of which BFO frequency you select, the difference is 700 Hertz so that’s the sidetone you hear.

Which frequency the BFO supplies is determined by whether your receiver, in CW mode, is set for USB or LSB. If you have tuned your receiver so the incoming signal is exactly centered in the IF bandpass, switching between LSB and USB will not change the pitch of the sidetone. This is a good test to see if you are tuned dead-on the incoming signal.”

“I don’t see why my transceiver has that setting for CW if it doesn’t make any difference,” said Hambone.

“Personally, I haven’t found it to be very useful,” continued Elmer. “But, in some cases of heavy QRM, selecting one frequency or the other and slightly detuning may help separate the signal you want from the one you don’t by positioning the QRM just outside the receiver’s band-pass. Getting the best performance out of your receiver takes more skill than just pushing a filter button.”

“So, Unck, for my project, I can say that CW just transmits a carrier and the tone is put in at the receiver. The sending transmitter has nothing to do with the tone the receiving end hears. Is that right?”

“Yes Hammy, that’s right. Don’t forget that even though CW stands for continuous wave, it’s not continuous in that you turn it on and off.”

“How about AM, amplitude modulation? That must be more complicated because it’s sending voice,” asked Dude.

“Nope. It’s actually simpler at the receiver because you don’t need a BFO to receive the signal. But there’s a catch.

The name – amplitude modulation – comes from the fact that the transmitter uses the voice signal to vary the strength of the carrier. That is, the louder the voice, the stronger the carrier and vice versa.”

“That seems simple, Unck. What’s the catch?”

“Switch your transceiver to AM and talk into the microphone and I’ll show you.”

“Hello, hello, testing one – two – three,” rang out from the receiver.

“Keep talking,” said Elmer. “Notice on the oscilloscope that the amplitude or strength of the carrier is steady between words or when you’re not talking. But when you talk, it gets stronger and weaker in step with your voice.”

“Yeah, yeah, I’ve seen this before,” said Dude getting a little bored with the whole thing. “The amplitude of the carrier goes up and down.”

“Dude, be still and learn. Now look at the spectrum analyzer. What do you see?”

“I see the big spike in the middle of the screen, that’s the carrier. And I see the little spikes on both sides of it bouncing up and down. Wait! The carrier is steady, even when Hammy is talking!”

“Yeah!”, added Hambone. “The analyzer must be broken – I didn’t do it! – that carrier should be going up and down.”

“No boys, the analyzer isn’t broken. You are confusing process with result.”

see HAMBONE on page 10

from HAMBONE on page 9

"Whaaat?"

"It's a little like baking a cake. The process is putting eggs, flour, water and other stuff in a pan, mixing it and cooking it. That's the process. The result is a cake that doesn't look or taste like any of the ingredients.

Amplitude modulation is similar, but without the eggs. In the transmitter, a voice signal and a radio frequency carrier signal are combined in such a way that the voice modulates, or varies, the strength of the carrier. That's the process. The result you get appears at the receiver.

At the receiver, you get a constant amplitude carrier that doesn't change with the voice signal plus extra frequencies on either side of it that do go up and down with the voice signal. Those extra frequencies are called *sidebands*.

What you are seeing is two views of the same signal. The 'scope shows how the signal changes in time and the analyzer shows how it changes in frequency. Those two views are called *time domain* and *frequency domain*. Both views are equally valid."

"I sort of get it," said Dude. "But why do AM stations send a carrier if it doesn't do anything?"

"It greatly simplifies the receiver. If you have a carrier, all you need is a diode to detect an AM signal."

"Detect it?"

"Yes, that means convert it to sound. The simplest AM radios are those old crystal sets. They had only a tuner to select an AM signal and a crystal diode to convert it to sound."

"I still don't get it," said Hambone. "If the carrier isn't going up and down, where does that power from the modulator go?"

"The modulator's power appears in the sidebands. Carrier power plus modulator power equals the total power of the signal. I suspect you'll learn exactly how this happens as your class progresses."

"So, Unck, which is right, does the carrier go up and down or not?" asked Hambone.

"It doesn't."

"That is weird. I bet it's these weird things – CW is not a continuous wave and the AM carrier is actually constant - are what that old man Pate wants us to write about."

"You're probably right, Hammy. But if you think CW and AM are weird, you ain't seen nothin' yet!

Switch your transceiver to single sideband, upper sideband or SSB-USB. Now tune to exactly 7.220 MHz and press the mic button. What do you see on the scope and the spectrum analyzer?"

"I don't see anything, nothing's happening," said Dude.

"Yeah, maybe the transceiver's broken."

"It's not broken," said Elmer. "Talk into the microphone."

"Whoa!" exclaimed Hammy. "A carrier that looked something like AM appeared on the oscilloscope and the spectrum analyzer showed some frequencies bouncing up and down. But it all went away when I stopped talking."

"Talk again," said Elmer, "and look closely at the spectrum analyzer. Do you notice anything missing?"

"Yes! There is no big bump at 7.220 MHz even though the transceiver is set to transmit on that frequency! All the little bumps are at higher frequencies."

"That's right! A SSB signal is really just an AM signal which has had its carrier and one sideband filtered out."

"I don't understand," said Dude. "The oscilloscope waveform looks the same as for AM."

"It looks almost the same, but it isn't," explained Elmer. "It's the spectrum analyzer that shows the big differences. If you remember from the AM signal, the sidebands bounced up and down together. That showed they both contained the modulating voice signal. Also, remember that the carrier just sat there.

Well, some smart guy figured out that if both sidebands carry the same thing, you could eliminate one of them. Likewise, he figured that since the carrier just sits there, it could be eliminated, too. The end result is a single sideband suppressed carrier signal which is its full name."

"That's pretty cool, Unck. But, if a receiver needs the carrier to detect an AM signal, why doesn't it need it to detect SSB?"

"It does and that's where your receiver's BFO comes in again. Just as in CW where you needed its output to actually hear the incoming signal as a tone, in SSB you need the BFO to supply the missing carrier so you can hear the incoming signal as a voice."

see HAMBONE on page 11

from HAMBONE on page 10

"Okaaay, but I don't think there's a BFO button on my transceiver," said Hammy.

"Very old communications receivers did have buttons to turn the BFO on and off and adjust its frequency, but modern receivers don't because BFO signal is supplied automatically when you press the SSB button. The closest thing you have is the 'clarifier' or 'receiver incremental tuning' knob."

"It looks to me like the weirdest thing about SSB is that the transmitter doesn't actually transmit on the frequency displayed. It transmits sidebands above or below it, but nothing is transmitted on it," said Hambone.

"Yeah," added Dude. "So far we've seen that the CW signal is not actually a continuous carrier and the AM carrier does not really change and the SSB signal has lost its carrier but, the transmitter indicates it anyway. That's all weird. This is good stuff."

"Odder, yet, in SSB," continued Elmer. "Is that generally, you can't tell the frequency of the missing carrier or what the signal is supposed to sound like."

"I can," said Hammy, "I just tune until I understand the voice and read the frequency off my transceiver."

"That's only because you are expecting a voice and you know what a voice sounds like. But what if you are tuning around with your SSB –USB turned on and you run into a frequency at 7,202,000 Hz. Are you receiving a 2,000 Hz tone whose suppressed carrier frequency is 7.2 MHz or a 1,000 Hz tone whose suppressed carrier is 7,201,000 Hz? You can't tell."

"That *is* strange!"

"Wait, the best is yet to come," said Elmer clearly enjoying bursting the boys' preconceptions of how radio works. "Let's take a look at FM."

"You mean 'Fine Music'?" asked Dude. "That's where I used to get my tunes with that little radio you gave me. Now it's the 'net."

"No, I know that means frequency modulation!" shouted Hambone. "The sound wiggles the carrier frequency back and forth and that's how the signal is transmitted. This one's easy, Unck.

All I have to do is press the FM button on my transceiver and we can see the signal. Testing 1-2-3, testing 1-2-3 …

That's funny, the oscilloscope shows the carrier is steady and the analyzer only shows a carrier and a couple of sidebands. Maybe my transceiver doesn't do FM very well."

"Not so fast, Hammy. There's more going on that it seems, but it's hard to see because your transceiver can only 'wiggle' the carrier a tiny amount, say, +/- 5KHz. That's why it appears steady on the 'scope. Let's hook this commercial FM signal generator in its place and set its wiggle – that's frequency deviation – to +/-50KHz. Now, plug your microphone into its audio input and talk."

"Wow!" exclaimed Dude. "Look at all those sidebands, they're all over the place."

"Yeah!" said Hambone. "The carrier's going up and down, too. But it's not wiggling from side to side. Where's the frequency modulation?"

"I told you FM was weird," said Elmer. "Depending on the frequency of the audio signal and how loud it is, which is the same as saying how much it causes the carrier frequency to wiggle, you get a few or a lot of sidebands and the amplitude of carrier changes, too."

"Okay, Unck. I sort of see the sidebands appearing. But why, in AM does the carrier that is supposed to vary in amplitude with the audio, actually stay constant. While here in FM, where the carrier is supposed to keep a constant amplitude, varies?" asked Hambone.

"Good question, Hammy."

"Do you have a good answer, Unck?" asked Dude.

Ignoring Dude, Elmer continued, "If you remember in AM, the modulator actually adds power to the carrier in order to change its amplitude. That additional power appears in the sidebands. That's why the carrier power can remain constant, the modulator is supplying the extra sideband power. Not so in FM.

In FM, it doesn't require any additional power to wiggle, er, modulate the frequency of the FM carrier. Therefore, the modulation process doesn't add any power, but it still generates sidebands as you see on the analyzer. Since no additional power is being added, the power in the sidebands has to come from some place and that place is the carrier.

see HAMBONE on page 12

from HAMBONE on page 11

Notice that as the sidebands get stronger, the carrier gets weaker and vice versa. When there's no sound, there are no sidebands and the carrier is full strength. Pretty cool, eh?

I bet it's the surprising, or as Dude puts it, weird, behavior of carrier waves that professor Pate wants you to write about."

"Whew, Unck, this is a lot of weird stuff to get my head around. I don't know how I can put it all in an assignment that's due tomorrow."

"I know!" shouted Dude. "Just hand in a copy of this story. Of course, put your name on it and fix up the places where the writer has screwed up. Nobody will know the difference."

***

"Hammy, how did your assignment for Professor Pate go?" Asked Uncle Elmer.

"We'll never know. He was a fraud. Classes aren't starting early and, as far as I can tell, only me and my friend got those emails. I think it was really old Bunny trying to get us to work harder."

"Nobody else saw Professor Pate or got emails from him?"

"Nope. But a couple of guys were taking selfies in the hall last Friday. In the background of one of the pics you can sort of see the back of a guy coming out of the Adjunct office. He was wearing a straw hat that looks a lot like yours, Unck. Where were you on August tenth?"

>> JCRAC FEEDBACK <<

JCRAC members John Raydo, KØIZ (smiling) and Herb Fiddick, NFØZ (working) used John's Colorado station to participate in the Colorado QSO party on September 2. The two made 1137 contacts, averaging 90 per hour, via remote laptop control from Kansas City.

Vanity Internet Domains?

The top-level domain (TLD) name ".radio" is now available to the radio industry and Amateur Radio enthusiasts, and is reserved for individuals and companies with active interest in the radio sector. The .radio TLD can be used for web and e-mail addresses and will be managed by the European Broadcasting Union (EBU) with support from other world broadcasting unions. Visit www.register.radio to request a .radio domain.

Individuals or entities in these categories will be accepted for the use of a .radio domain:

- Radio broadcasting stations
- Unions of Broadcasters
- Internet radios
- **Radio Amateurs**
- Radio professionals (journalists, radio hosts, DJs, etc.
- Radio-related companies selling radio goods and services
- Radio products and services

One or more .radio domain name(s) can be requested during the launch period, which ends on October 31, 2017. The cost for individual radio amateurs is about $30, including tax.

The launch process will not be first come, first serve. "The .radio team will seek to optimize domain name allocation to solve contentious issues and prioritize existing radio services," the EBU announcement said.

Starting in November, first come, first serve rules will apply, although eligibility requirements remain the same.

For more information, visit www.nic.radio

Reprinted from www.arrl.org/news/top-level-domain-name-radio-now-available. *Thanks to John Raydo for the tip.*